YK50EG

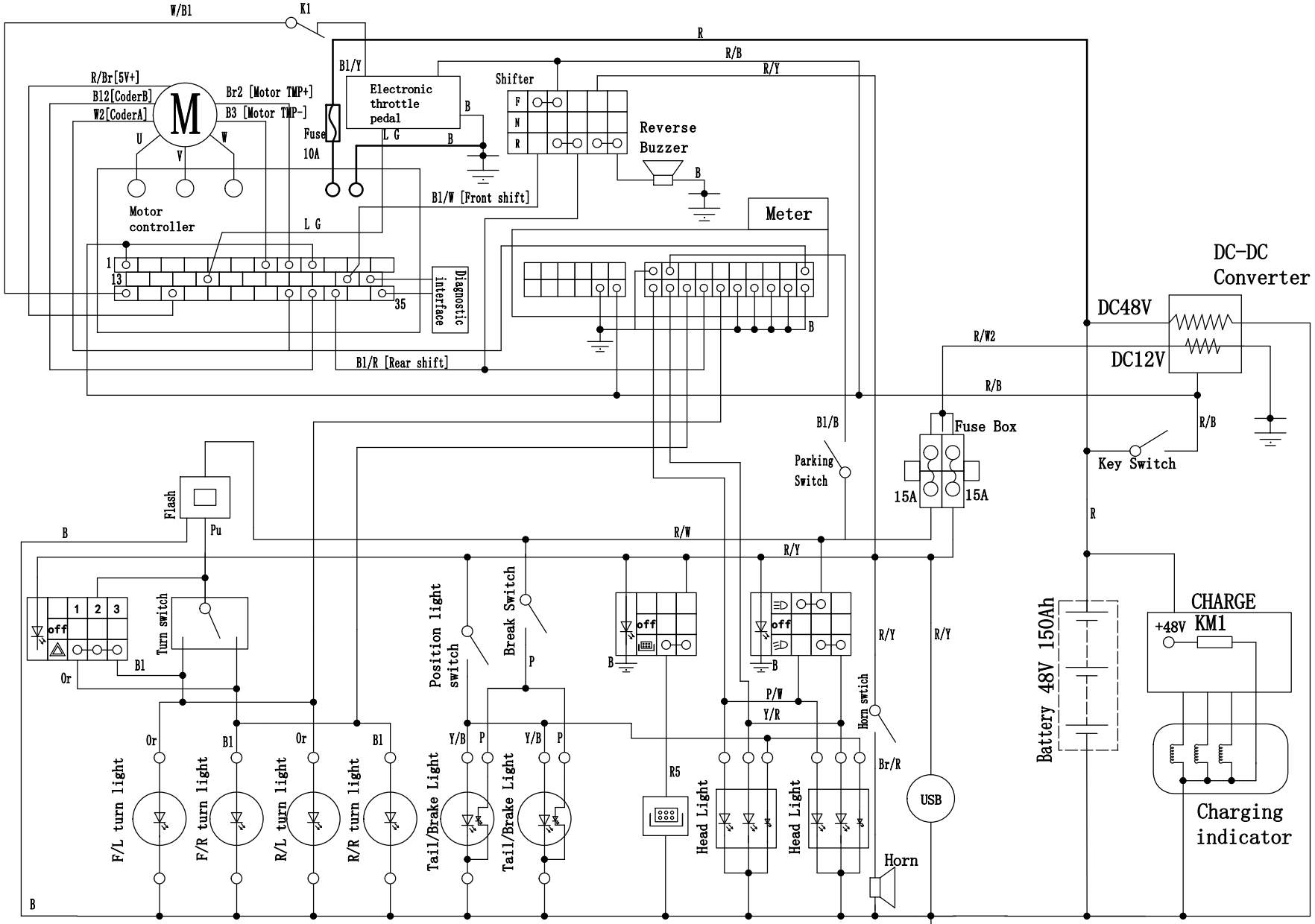

Note	Colour
R	Red
Y	Yellow
B	Black
R/W	Red/White
W	White
R/Y	Red/Yellow
P/W	Pink/White
P	Pink
G	Green
R/B	Red/Black
Y/R	Yellow/Red
Y/B	Yellow/Black
Or	Orange
W/Bl	White/Blue
Bl	Blue
L G	Light Green
Bl/R	Blue/Red
Bl/W	Blue/White
Bl/B	Blue/Black
Pu	Purple
Br	Brown